Mechanical Products Company

RAISING THE BAR - COUNT ON IT

High Amperage to 225 Amp

Type III Vehicle Protection

IP67 & IP69K Waterproof options

SAE & ABYC Compliant

Ignition-Protected

LED TripID™ Options

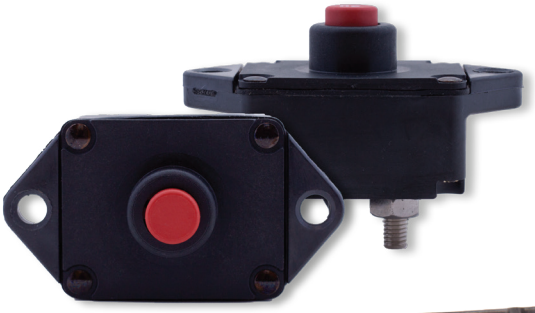

MADE in USA

SUPERIOR CIRCUIT PROTECTION

www.mechprod.com

SERIES 17

HIGH AMP CIRCUIT BREAKER

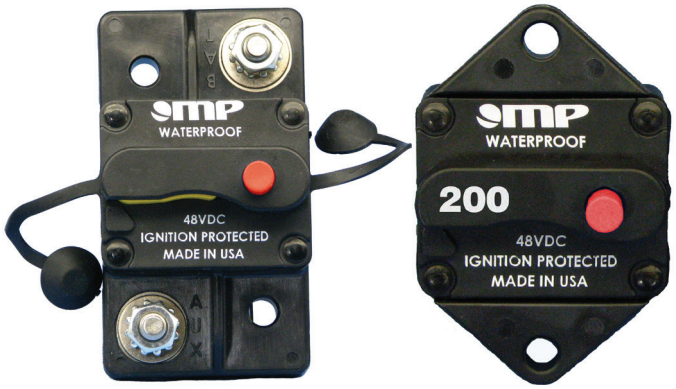

High Amp, IP67 dust & waterproof, ignition protected, SAE Type III (PTT) circuit breaker. Available 25 thru 225A. Panel and surface mount versions. Trip free operation. SAE and ABYC compliant. Options include 1/4" & 3/8" stainless terminals & hardware. Patented. Contact factory for LED TripID™ accessory.

Panel Mount P/N	Surface Mount P/N	Amp Rating
175-P0-025-2R	175-S0-025-2R	25 Amp
175-P0-030-2R	175-S0-030-2R	30 Amp
175-P0-040-2R	175-S0-040-2R	40 Amp
175-P0-050-2R	175-S0-050-2R	50 Amp
175-P0-060-2R	175-S0-060-2R	60 Amp
175-P0-070-2R	175-S0-070-2R	70 Amp
175-P0-080-2R	175-S0-080-2R	80 Amp
175-P0-100-2R	175-S0-100-2R	100 Amp
175-P0-120-2R	175-S0-120-2R	120 Amp
175-P0-150-2R	175-S0-150-2R	150 Amp
175-P0-175-2R	175-S0-175-2R	175 Amp
175-P0-200-2R	175-S0-200-2R	200 Amp
175-P2-200-2R	175-S2-200-2R	200 Amp
175-P2-225-2R	175-S2-225-2R	225 Amp

Interrupt Capacity	
25-150 Amp SAE Type III	3kA @ 14VDC / 1.5kA @ 48VDC
175-225 Amp SAE Type III	1.5kA @ 14VDC / 1.5kA @ 30VDC
Max Voltage Rating SAE Type III	48VDC (25-150A); 30VDC (175-200A); 14VDC (225A)
Operating Temp Range	-40°C/-40°F to 85°C / 185°F
Type	Thermal - Type III Push to Trip manual reset
Terminal Stud	1/4"-28 (P0 & S0) 3/8"-16 (P2 & S2)
Termination Torque	1/4" stud - 50 IN-LBS [5.6 N.m] MAX 3/8" stud - 80 IN-LBS [9.0 N.m] MAX
Weight Panel Mount	3.1 oz (88 gm)
Weight Surface Mount	4.0 oz (114 gm)
Ingress Protection	IP67
Ignition Protected	SAE J1171
Regulatory	SAE J1625, ABYC E-11

17LED-R	Snap-On tripID™ *(Bulk)*
17LED-RP	Snap-On tripID™ *(Bulk & Individually bagged)*

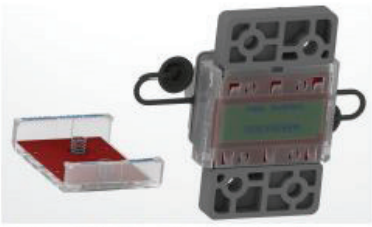

MP P/N: 17LED-R* (Sold Separately or Assembled) — Rear Surface Mount Breaker w/17LED-R Snap-On tripID™

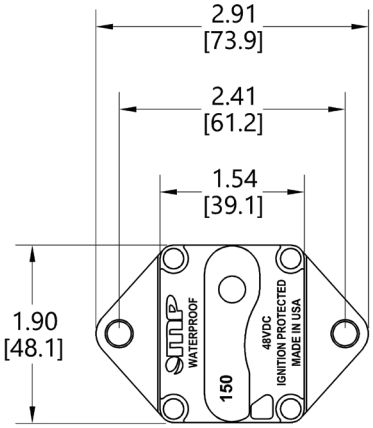

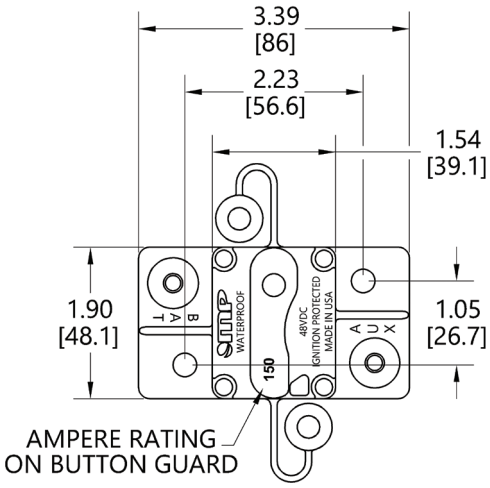

Mechanical Products Company
1112 N. Garfield St. Lombard, IL 60148 helpme@mechprod.com
phone 630 | 953 | 4100 fax 630 | 953 | 4110 www.mechprod.com

Specifications subject to change

SERIES 18

HIGH INTERRUPT CIRCUIT BREAKER

Weatherproof, UL1500 Ignition protected, available as a Push-to-Reset protector. DC Ratings from 15-70 Amp. Designed for harsh environments as tested to ABYC, USCG, SAE, UL & Mil Stds requirements. Trip Free.

Interrupt Capacity	
Tested per ABYC E11 & UL1077	3kA @ 32VDC and 120VAC 5kA @ 32VDC SAE J553 Compliant
Max Voltage Rating	32VDC and 120VAC
Operating Temp Range	-40°C/-40°F to 85°C / 185°F
Type	Thermal - manual reset
Terminal Stud	10-32 threaded .449" stud
Termination Torque	13 in.-lbs (1.47 N.m) MAX
Weight	39 gm
Ingress Protection	SAE 1428 Weatherproof
Ignition Protected	UL1500
Regulatory	SAE J553, ABYC E-11, Tested per UL1077

Part Number	**Amp Rating**
1810-E1-1-3T-0150-13	15 Amp
1810-E1-1-3T-0200-13	20 Amp
1810-E1-1-3T-0250-13	25 Amp
1810-E1-1-3T-0300-13	30 Amp
1810-E1-1-3T-0400-13	40 Amp
1810-E1-1-3T-0500-13	50 Amp
1810-E1-1-3T-0600-13	60 Amp
1810-E1-1-3T-0700-13	70 Amp

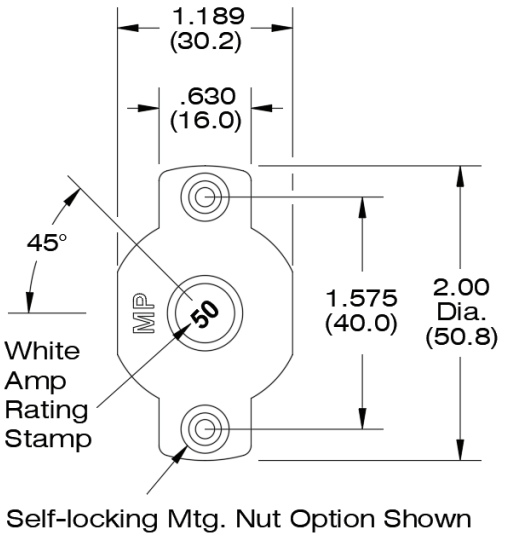

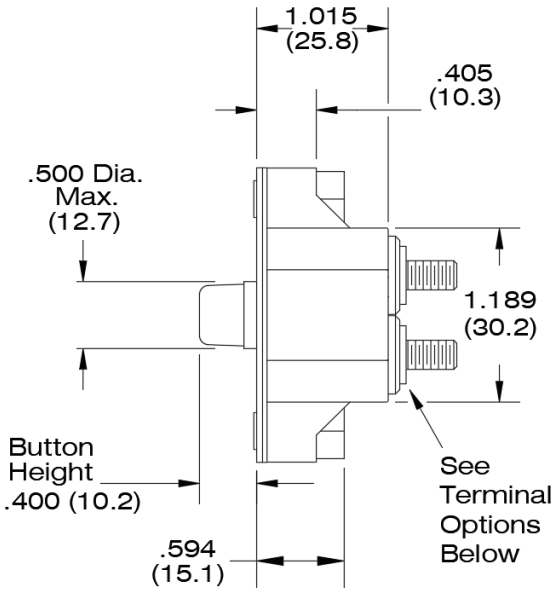

Mechanical Products Company
1112 N. Garfield St. Lombard, IL 60148 helpme@mechprod.com
phone 630 | 953 | 4100 fax 630 | 953 | 4110 www.mechprod.com

Specifications subject to change

SERIES 19

HIGH AMP CIRCUIT BREAKER

High Amp, IP67 & IP69K, Ignition protected, SAE & ABYC compliant, Type III circuit breaker. Available 50 to 200 Amp. Designed for harsh applications to 30VDC. LED tripID™ for open circuits.

Interrupt Capacity	
25-150 Amp Type III	2.5kA @ 14VDC / 1.5kA @ 28VDC
175-200 Amp Type III	2.5kA @ 30VDC
Max Voltage Rating Type III	30VDC
Operating Temp Range	-40°C/-40°F to 85°C / 185°F
Type	Thermal - Type III manual reset
Terminal Stud	1/4"-28 threaded stud
Termination Torque	50 IN-LBS [5.6 N.m] MAX
Weight Panel Mount	2.6 oz (74 gm)
Ingress Protection	IP67 dust and waterproof rated IP69K high temperature and pressure spray
Ignition Protected	SAE J1171
Regulatory	SAE J1625, ABYC E-11

Standard P/N	Lighted P/N	Amp Rating
19M-P10-B-050-02	19M-P10-R-050-02	50 Amp
19M-P10-B-060-02	19M-P10-R-060-02	60 Amp
19M-P10-B-070-02	19M-P10-R-070-02	70 Amp
19M-P10-B-080-02	19M-P10-R-080-02	80 Amp
19M-P10-B-100-02	19M-P10-R-100-02	100 Amp
19M-P10-B-120-02	19M-P10-R-120-02	120 Amp
19M-P10-B-150-02	19M-P10-R-150-02	150 Amp
19M-P10-B-175-02	19M-P10-R-175-02	175 Amp
19M-P10-B-200-02	19M-P10-R-200-02	200 Amp

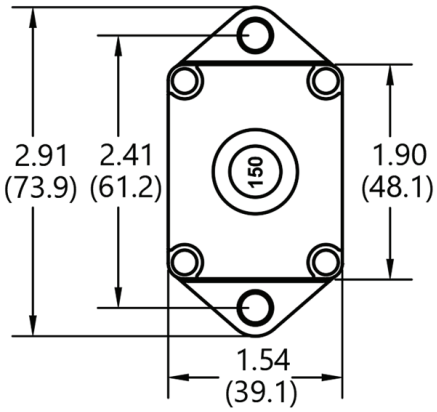

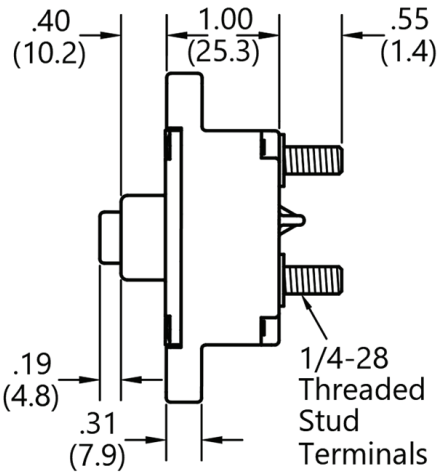

Mechanical Products Company
1112 N. Garfield St. Lombard, IL 60148 helpme@mechprod.com
phone 630 | 953 | 4100 fax 630 | 953 | 4110 www.mechprod.com